Additional information:

- This special length toolholder is designed for low rpm and light machining and drilling applications only
- Concentricity as for standard XL toolholders can not be guaranteed for this special length XL toolholder

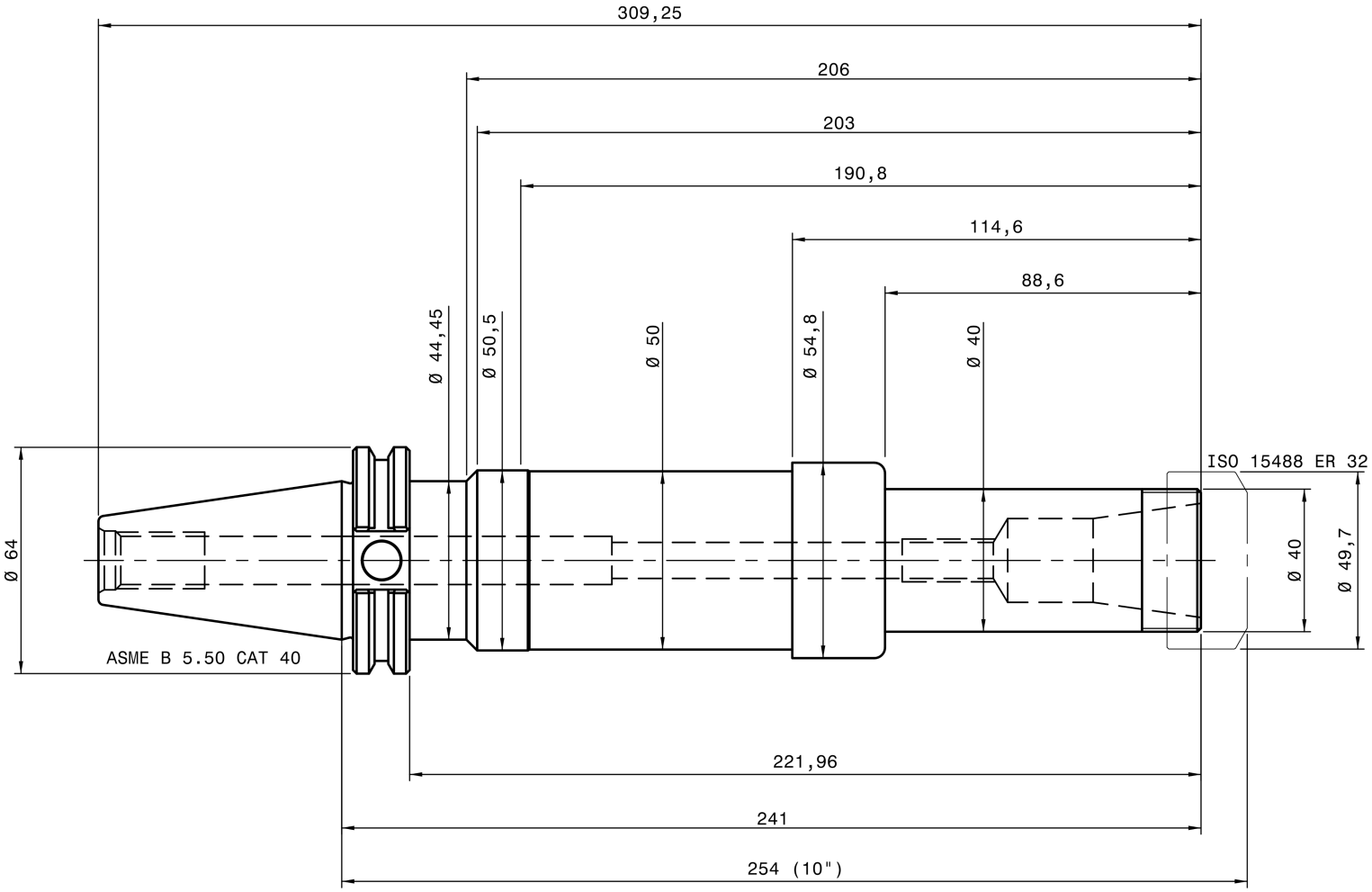

REGO-FIX 8843.16081

- This is a non-controlled copy. All information given herein is subject to change without notice
- The information given herein has been carefully checked and is believed to be correct. REGO-FIX, however, assumes no responsibility or liability for any errors, inaccuracies or omissions that may appear in this drawing
- This document is subject to copyright laws. No part of this document may be reproduced or transmitted in any form or any means, electronic or mechanic, for any purpose, without the express written permission of REGO-FIX

REGO-FIX

Obermattweg 60 / 4456 Tenniken / Switzerland
P +41 61 976 1466
www.rego-fix.com / info@rego-fix.com

Date	04.05.2021
Part No.	8843.16081
Type	Toolholders

CAT 40 / ER 32 X 10" XL